SR3 - VE3 - BV3 - GV2 CONTROL BOXES

CONTROL BOXES FOR FORCED DRAUGHT GAS BURNERS, WITH POWER UP TO 120KW.

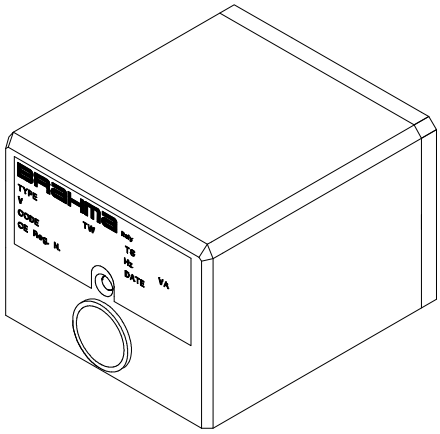

DESCRIPTION

The SR3 - VE3 - BV3 - GV2 safety devices are suitable to control forced draught gas burners for civil and industrial applications.

The BV3 control is used for fast boilers in which hot water (or steam) taking has to occur within short times, which cannot be granted by using the SR3 and VE3 devices.

The GV2 control box is used for small boilers in which a longer safety time is generally allowed.

According to TÜV Bayern, Monaco, the SR3 control is in compliance with the German regulation DIN 4788, part 3, for power up to 120KW. It also obtained the DIN-DVGW 89.11fBN approval, now expired and not renewable.

The “Laboratorio di Macchine e Termotecnica del Centro Studi ed Esperienze” in Rome, Capannelle, tested the SR3 control for power up to 93KW, which obtained the certification no. 3704/81/77/3A and the approval of the Ministry of the Interior for fire prevention (circulars no. 68 and no. 42).

TECHNICAL DATA:

Supply voltage:	220V(-15% +10%)
	50Hz (±5%)
on request:	110V
Operating temperature range:	-10°C +60°C
Protection degree:	IP40
Starting power consumption:	10VA
Operating power consumption:	6,5VA
Max. current rating	I max.
- burner motor:	4 A
- EV valve:	2 A
- ignition transformer:	2 A
- alarm:	1 A
Regulators (T, PA, PG):	6 A
Times:	
- prepurge time (TV):	
SR3 - VE3:	50 s
BV3 - GV2:	20 s
- safety time (TS): GV2:	15 s
SR3 - VE3 - BV3:	3 s
- dropout time on running flame failure:	<1 s
Flame control:	
- minimum ionization current:	0,5µA
- recommended ionization current:	7µA
- minimum insulation resistance between probe, cable and ground:	> 50MΩ
- voltage on the detection probe:	300V
Weight including socket:	550 g

FLAME CONTROL

A transformer having one primary and two secondary windings supplies the electronic flame detection circuit at low voltage, and the detection probe with about 300V. This supply system offers the big advantage of having constant ionization values, even if the network is a live-live installation.

To check the efficiency of the flame detection circuit, you have to proceed as follows: connect a low impedance ammeter, as shown in Fig.1; the R1 ... Rn resistors in series must give the total resistance value of 200MΩ (e.g. 20 resistors of 10MΩ 1/4W 5%). If the control box is supplied with 220V, the measured current value is about 0,5+0,6µA DC, which causes the flame relay to switch on. Lower current values indicate that the circuit is damaged or only partially efficient.

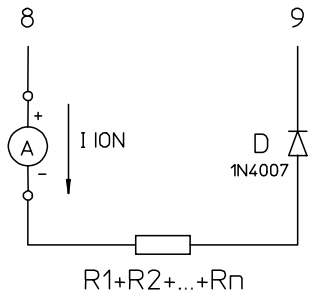

Fig.1

CONSTRUCTION

The components of the control box are fixed on a pressed frame made of thermohardening material, with high dielectric resistance. The plastic casing protects the device from possible damages resulting from crashes, incautious opening, dust and contact with the external environment.
Flexible unipolar conductors of different sizes connect the components of the control, except for the flame detection and prepurge control circuit, which is mounted on a printed circuit.

OVERALL DIMENSIONS

The overall dimensions of the control box are shown in Fig.2.

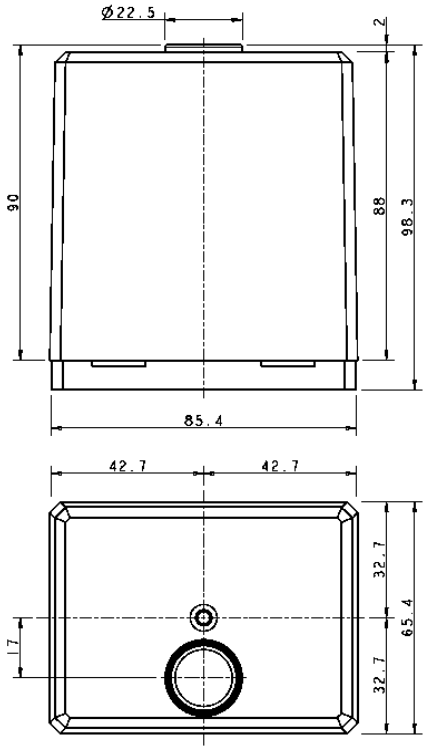

Fig.2

ACCESSORIES

The control is provided with inbuilt reset button and luminous lockout signal.
It can be supplied with kanthal flame detection probes in different executions (see, for instance, Fig.3).

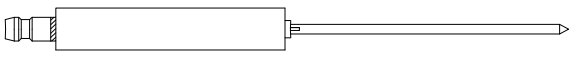

Fig.3

The casing is arranged for the fitting of core hitches and/or cable holders on its sides; also these accessories can be supplied on request.

CONNECTION

As regards the interconnection system of this control, several solutions are possible and different types of connecting sockets can be employed (see Fig.4 and Fig.5).
Socket N (code 18210095) differs from sockets AB (code 18210130) for its greater number of terminals connecting neutral.

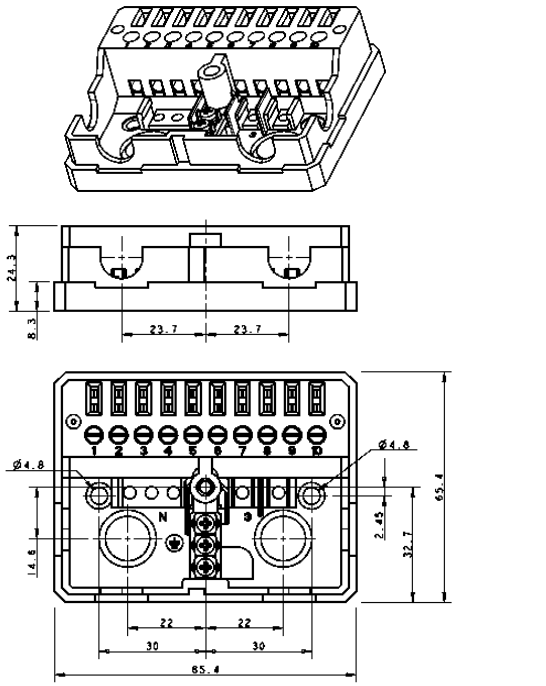

Socket AB
Fig.4

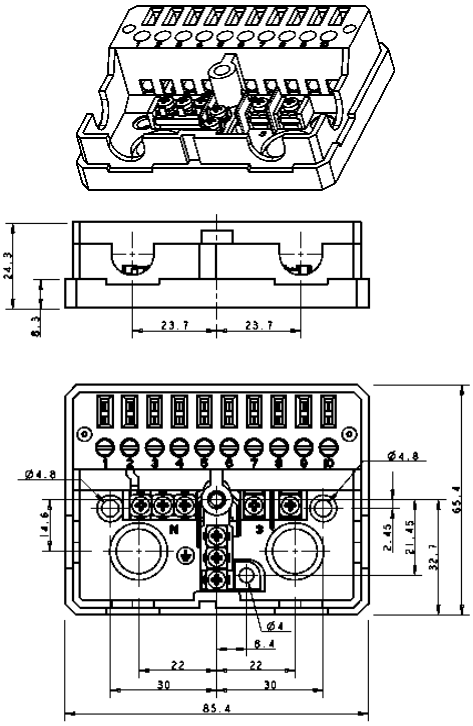

Socket N
Fig.5

DIRECTIONS FOR INSTALLATION

- Control boxes are safety devices and must not be opened; the manufacturer's responsibility and guarantee are invalidated if the control is opened.
- For safety reasons a regulation shutdown must occur every 24 hours.
- The control can be mounted in any position.
- **Live** and **neutral** must be connected correctly; a mistake could cause a dangerous situation.
- The earth terminal of the control, the metal frame of the burner, the earth of the ignition transformer and the earth of the main supply must be well connected.

- Make sure that the discharge of the ignition transformer does not hit the detection probe.
- The connecting wire of the detection probe must not be longer than 20 m.
- Avoid putting the detection cable close to power or ignition cables.
- Use a heat resistant cable and detection probe, well insulated to the ground and protected from humidity or water in general.
- Always check the control before the first start and also after any replacement or after a long period of non-operation of the system. In particular make sure that:
- The connections are corresponding to the scheme below.
- The intervention of limiters and safety devices causes a safety shutdown according to the application.
- The level of the flame signal is high enough.
- A short circuit between detection probe and burner casing does not cause any flame simulation.
- In running state, a leakage of the detection probe to the ground causes the interruption of the oil flow and the starting of a new ignition cycle in the case of the BV3 and VE3 controls, while it causes a lockout in the case of the SR3 and GV2 controls.

THERMAL TIMERS

The safety time is given by a compensated thermal timer. The fixed value of 220 V/20℃ does not vary of more than 25% with voltage (-15% +10%) and temperature (-10 +60℃) variations.

The prepurge time is obtained by means of a compensated thermal timer too; in the controls type SR3 and VE3 it is possible to obtain very exact prepurge times even after frequent and repeated starts of the unit, by exploiting the bimetal both in the heating and in the cooling stage.

OPERATING CYCLE

When thermostats and gas pressure switch are closed, the control box starts up the burner motor. During this period the device carries out a self-check; if the check is positive the cycle continues, and at the end of the prepurge stage the valve and the ignition transformer are simultaneously supplied.

During the safety time the flame has to become steady, otherwise the control effects a lockout. Consequently, the valve and the ignition transformer are deenergized, while the lockout signal is supplied.

If a limiter or regulator is opened, the oil flow is immediately stopped and the burner is switched off.

The enclosed cycle diagrams are useful for a better understanding of the operating cycle of each control box.

Abnormal operation:

- Air flow failure

  SR3 - VE3: in case of failure of the air pressure switch the control proceeds to lockout at the end of the prepurge time.

  BV3: in case of failure of the air pressure switch the control continues the prepurge stage.

- Parasitic flame

  The presence of a parasitic flame signal at start or during the prepurge time causes a lockout immediately or at the end of the prepurge time.

Flame failure during operation causes different behaviour, according to the type of control:

SR3 - GV2: reignition attempt with transformer supply for a max. period corresponding to the safety time; after this delay, in case no spark restoration occurs, the control performs a lockout.

VE3 - BV3: repetition of the whole ignition cycle.

RESET OF THE CONTROL

To reset the control after a lockout, act on the button after waiting for the restoration of the lockout thermal, which usually takes about 20 seconds.

ELECTRIC SCHEME SR3

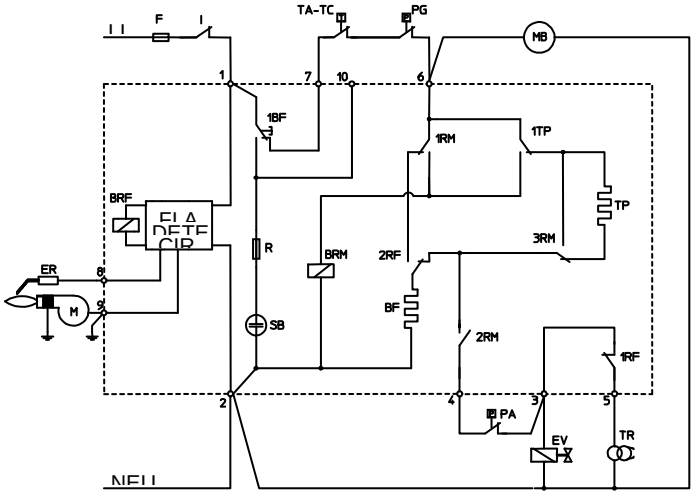

ELECTRIC SCHEME VE3

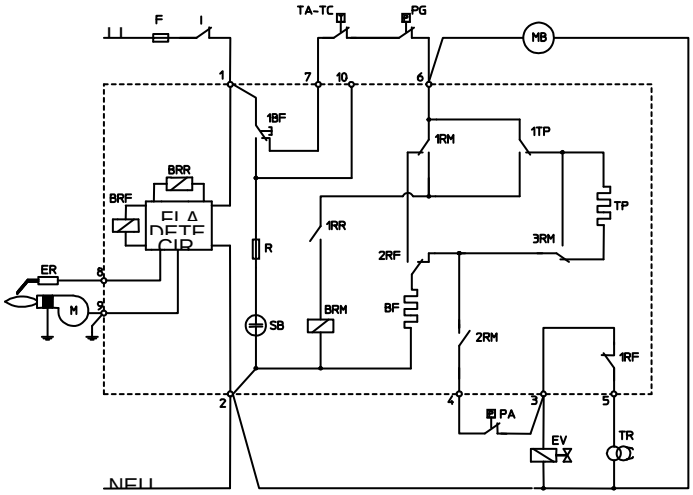

ELECTRIC SCHEME GV2

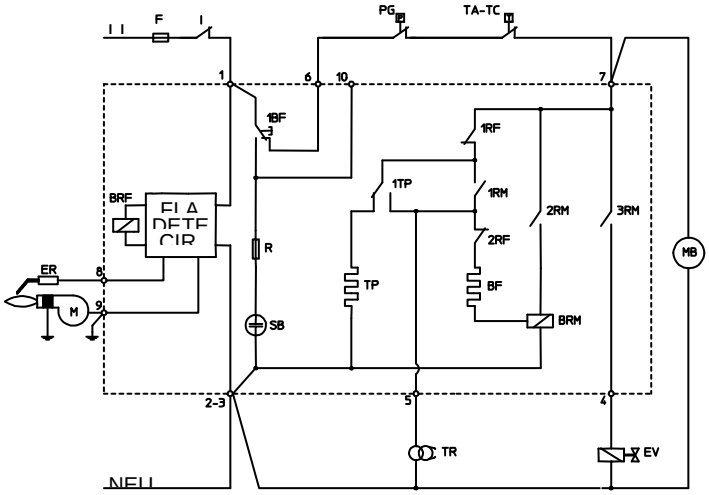

ELECTRIC SCHEME SYMBOLS

BF: postpurge and lockout thermal
BRF: flame detection relay
BRM: operation relay
BRR: repetition cycle relay
ER: detection probe
EV: gas valve
M: burner casing
MB: burner motor
PA: air pressure switch
PG: gas pressure switch
SB: lockout signal
TA: ambient thermostat
TC: boiler thermostat
TP: thermal programmer
TR: ignition transformer

ELECTRIC SCHEME BV3

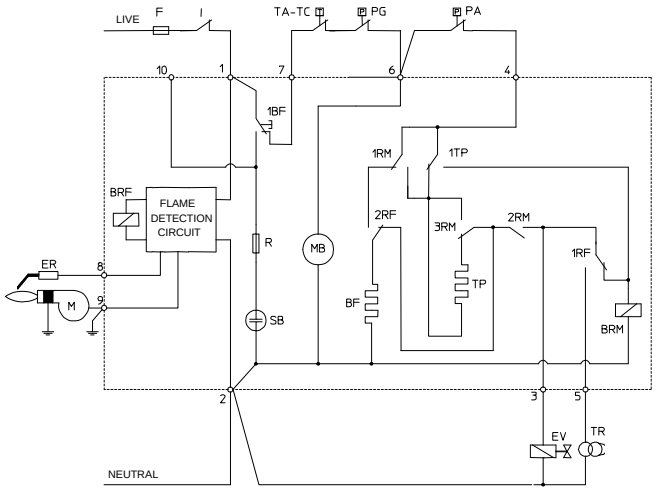

ELECTRIC SCHEME SYMBOLS

BF: postpurge and lockout thermal
BRM: operation relay
EV: gas valve
MB: burner motor
PG: gas pressure switch
TA: ambient thermostat
TP: thermal programmer
BRF: flame detection relay
ER: detection probe
M: burner casing
PA: air pressure switch
SB: lockout signal
TC: boiler thermostat
TR: ignition transformer

CONNECTION DIAGRAMS

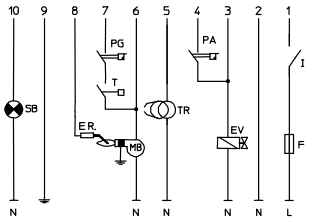

TYPE SR3 VE3

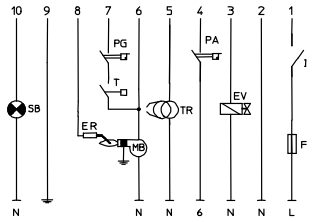

TYPE BV3

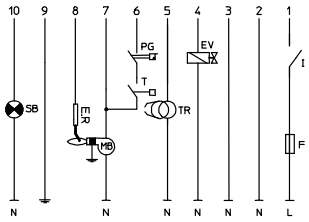

TYPE GV2

OPERATING CYCLES

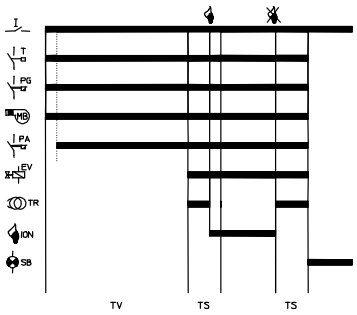

TYPE SR3 GV2

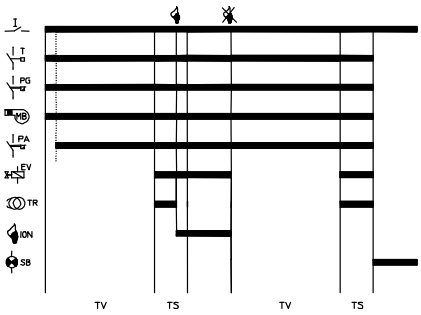

TYPE VE3 BV3

Air flow failure

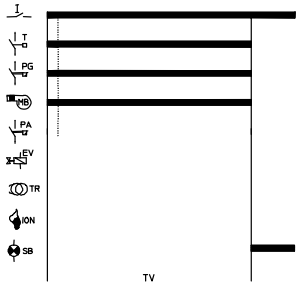

Lockout at the end of TV
TYPE SR3 VE3

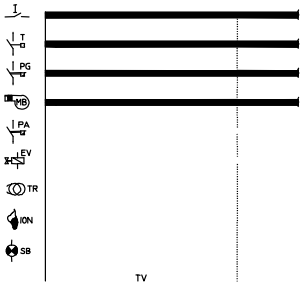

Continuous prepurge state
TYPE BV3

Parasitic flame signal

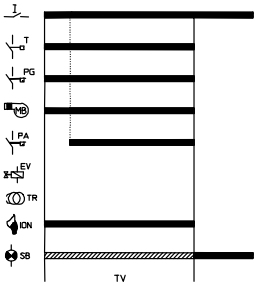

Lockout immediately at the end of TV

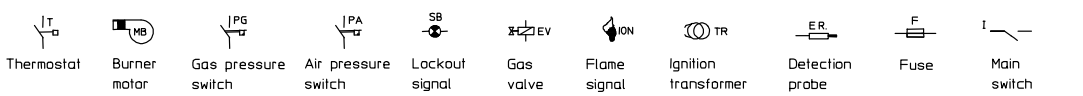

ATTENTION -> Company Brahma S.p.A. takes no responsibility for any damage resulting from Customer's tampering with the device.

BRAHMA S.p.A.
Via del Pontiere, 31
37045 Legnago (VR)
Tel. +39 0442 635211 - Telefax +39 0442 25683
http://www.brahma.it
E-mail : brahma@brahma.it

12/04/23 Subject to amendments without notice