SANICOM 1
1332 | 11.19

SFA

*option

SANICOM1®

FR NOTICE D'INSTALLATION
UK INSTALLATION INSTRUCTIONS
DE INSTALLATIONSHINWEISE
IT STRUZIONI PER L'INSTALLAZIONE
ES MANUAL DE INSTALACIÓN
PT MANUAL DE INSTALAÇÃO
NL INSTALLATIE VOORSCHRIFTEN

SE INSTALLATIONSANVISNING
DK INSTALLATIONSVEJLEDNING
NO INSTALLASJONSANVISING
FI ASENNUSOHJEET
HU FELSZERELÉSI ÉS KEZELÉSI ÚTMUTATÓ
PL INSTRUKCJA INSTALACJI
RU ИНСТРУКЦИЯ ПО МОНТАЖУ И ЭКСПЛУАТАЦИИ

RO MANUAL DE INSTALARE
CZ NÁVOD K INSTALACI A POUŽÍVÁNÍ
TR KURULUM KILAVUZU
EL ΟΔΗΓΙΕΣ ΕΓΚΑΤΑΣΤΑΣΗΣ
CN 指南以备用
KR 설치내용서

CE

* Possible connection

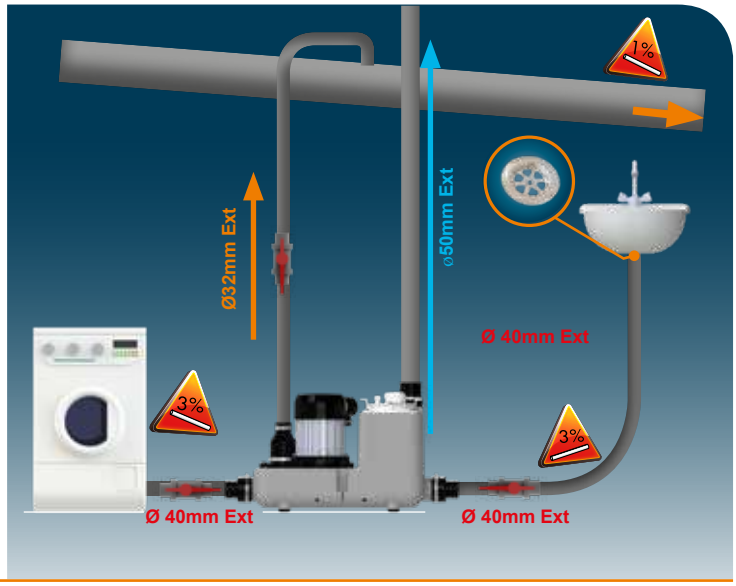
1%
Ø32mm Ext
Ø50mm Ext
Ø 40mm Ext
3%
3%
Ø 40mm Ext
Ø 40mm Ext

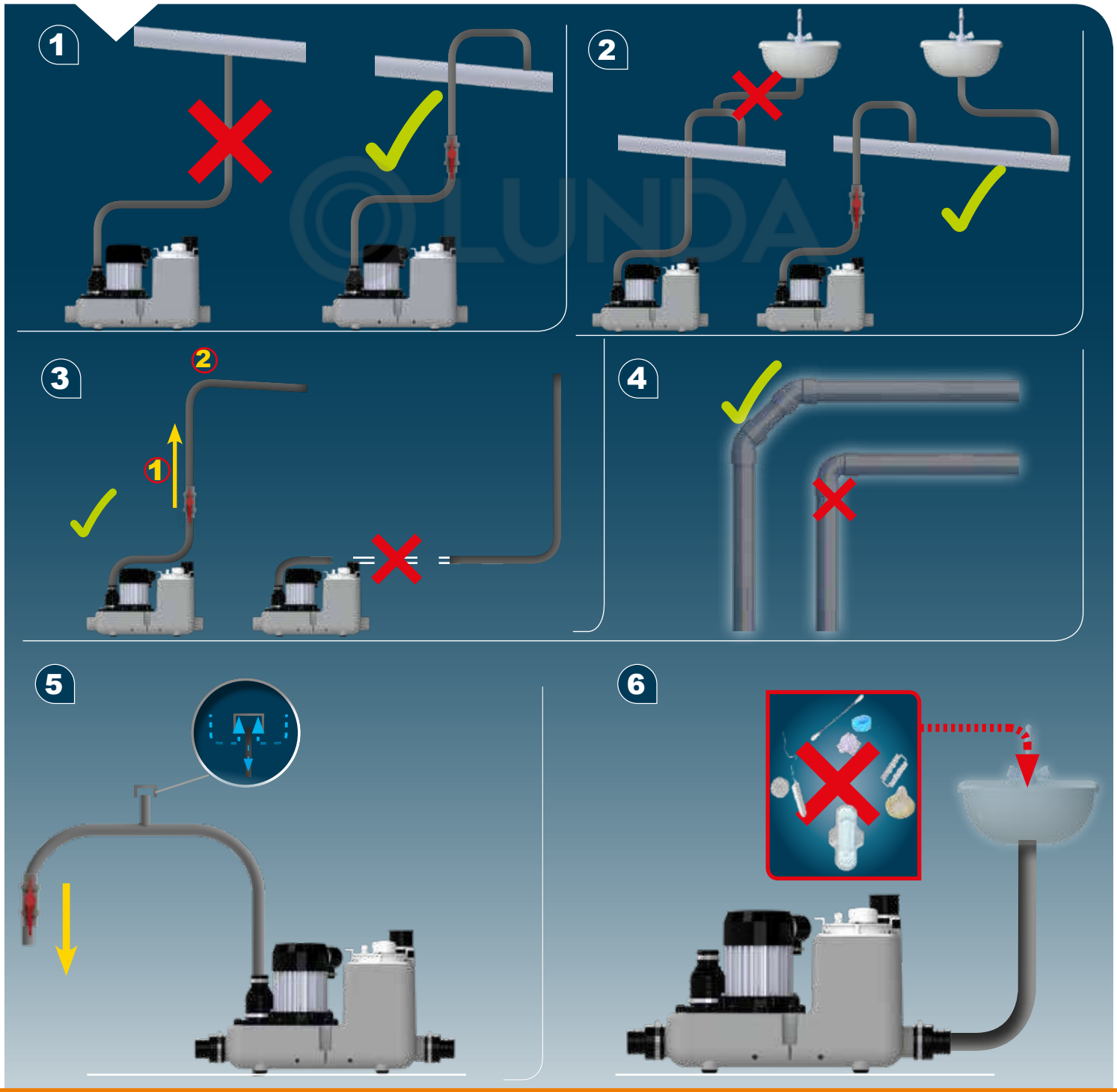
1
2
3
2
1
4
5
6

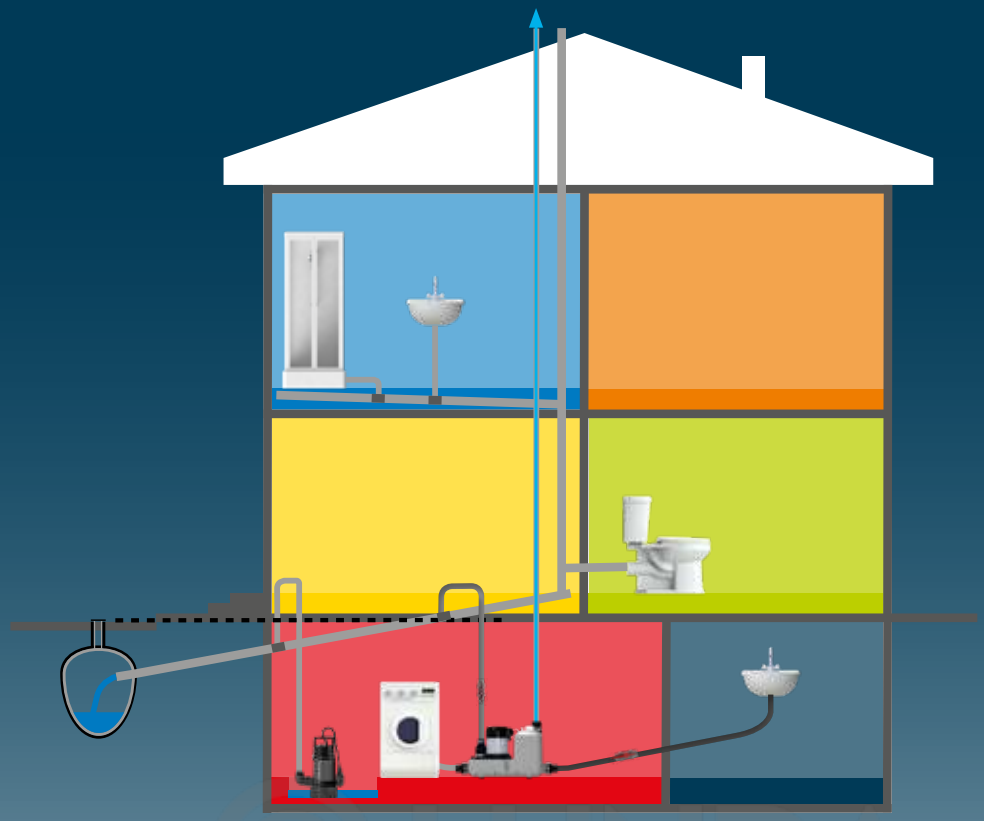

1

2

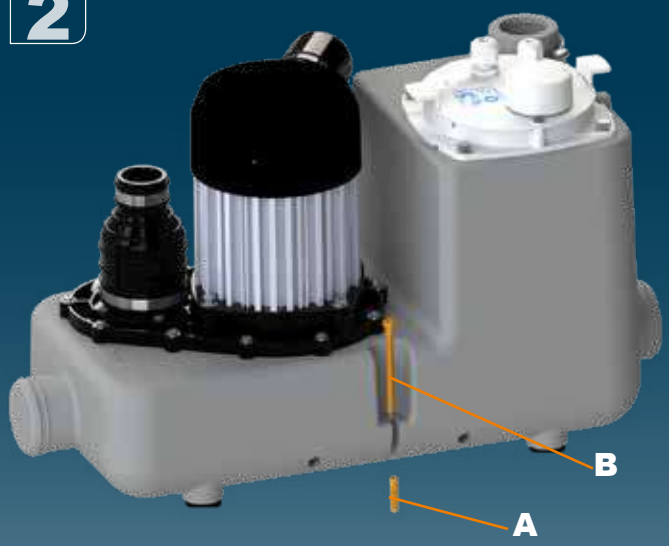

3

4
E
C
D
Ø 40mm Ext

5

6
D
C
E
Ø 40mm Ext

7
Ø 50mm Ext
G

8

9

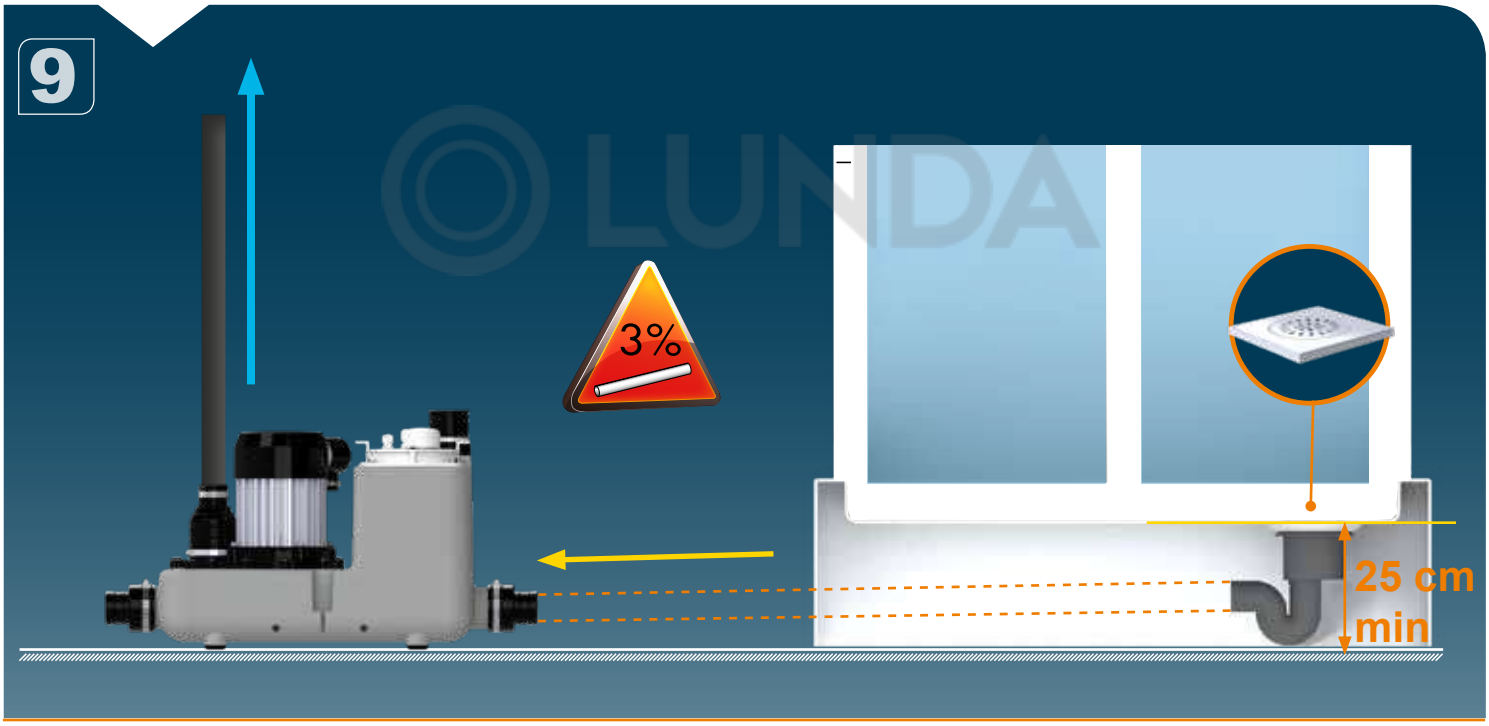

10

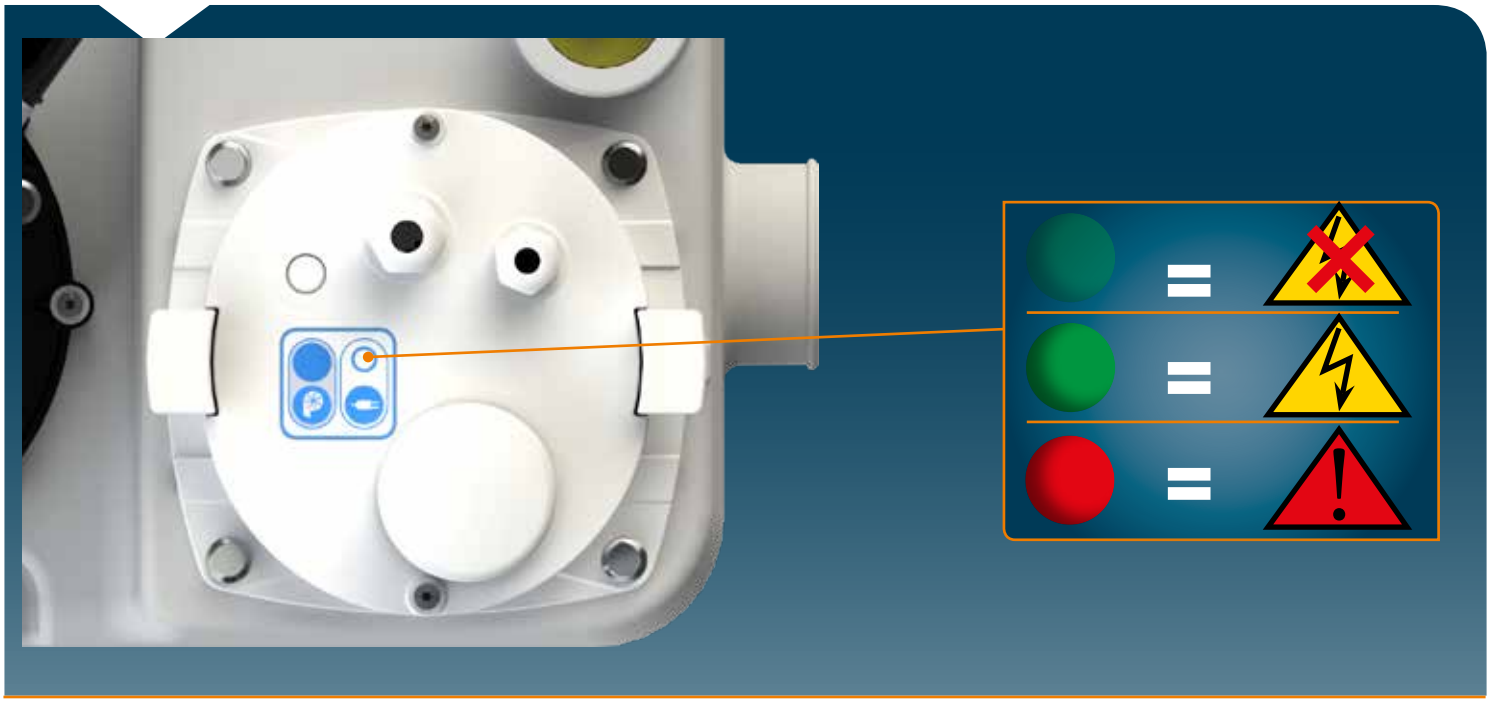

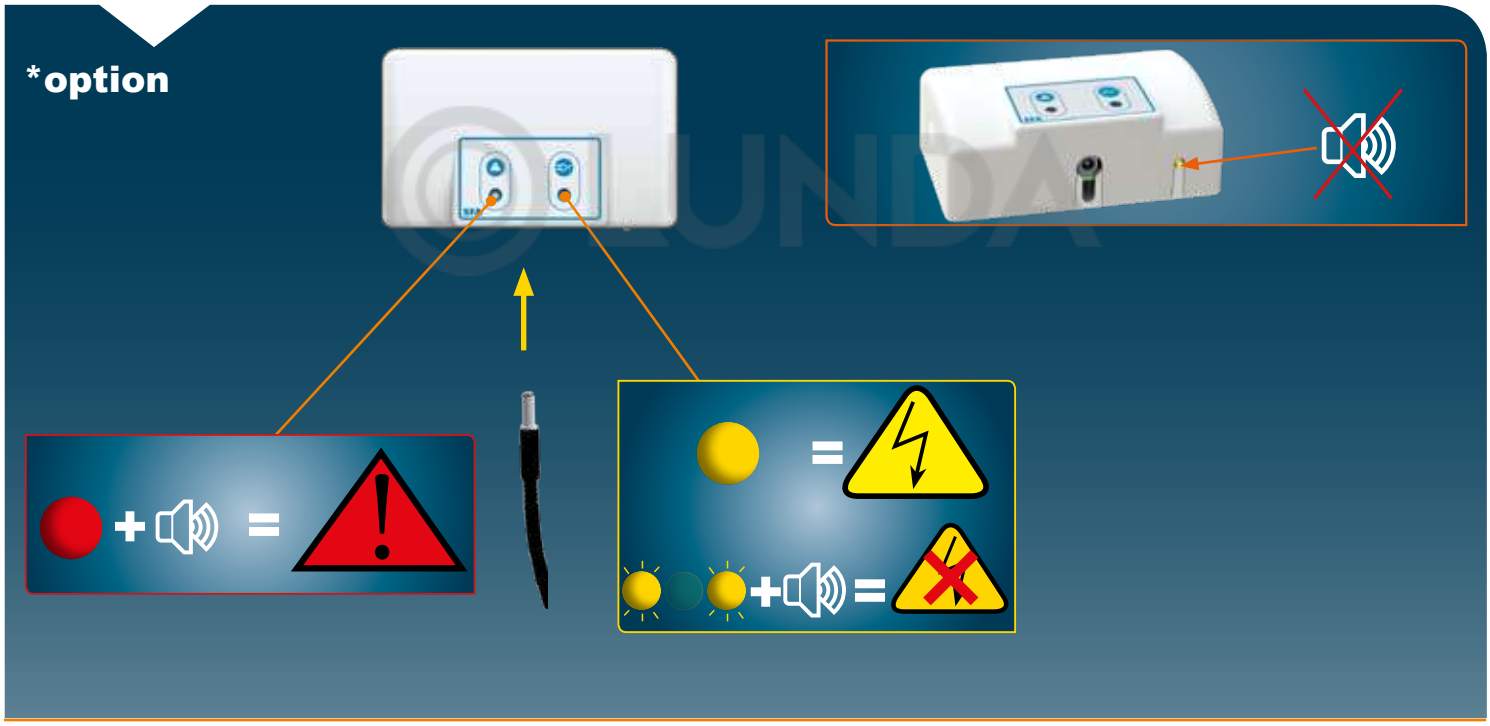
*option

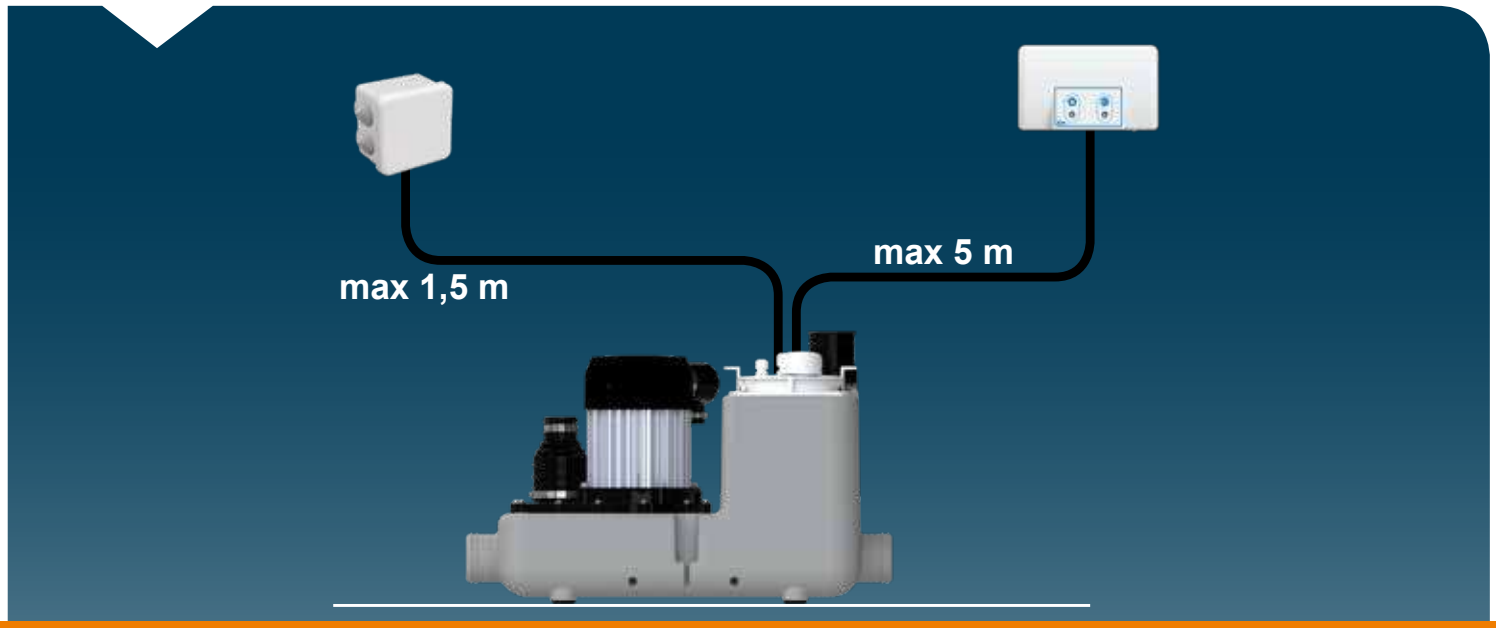
max 1,5 m
max 5 m

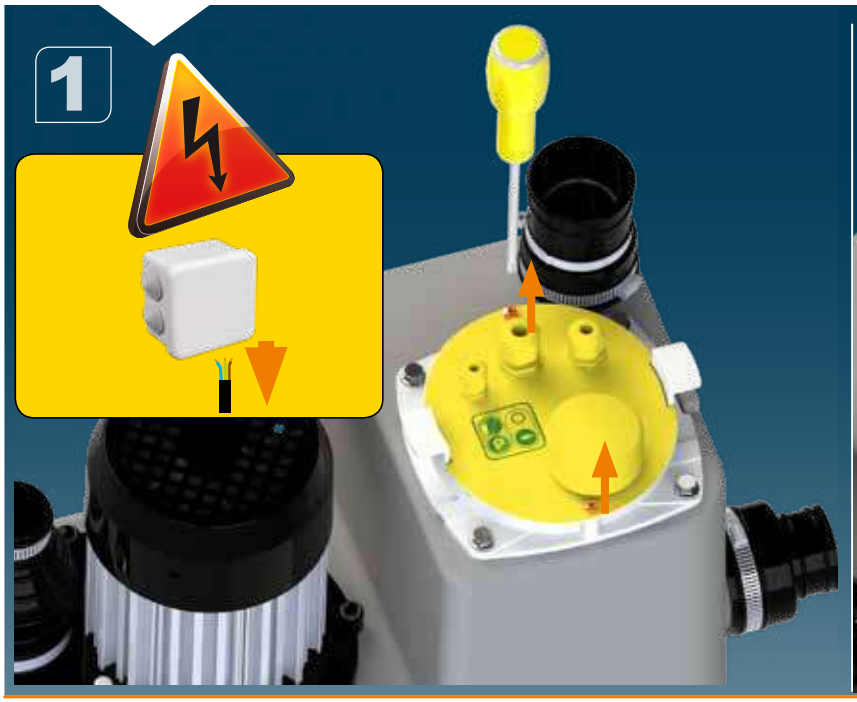
1

2

1
A
B

2

1

2

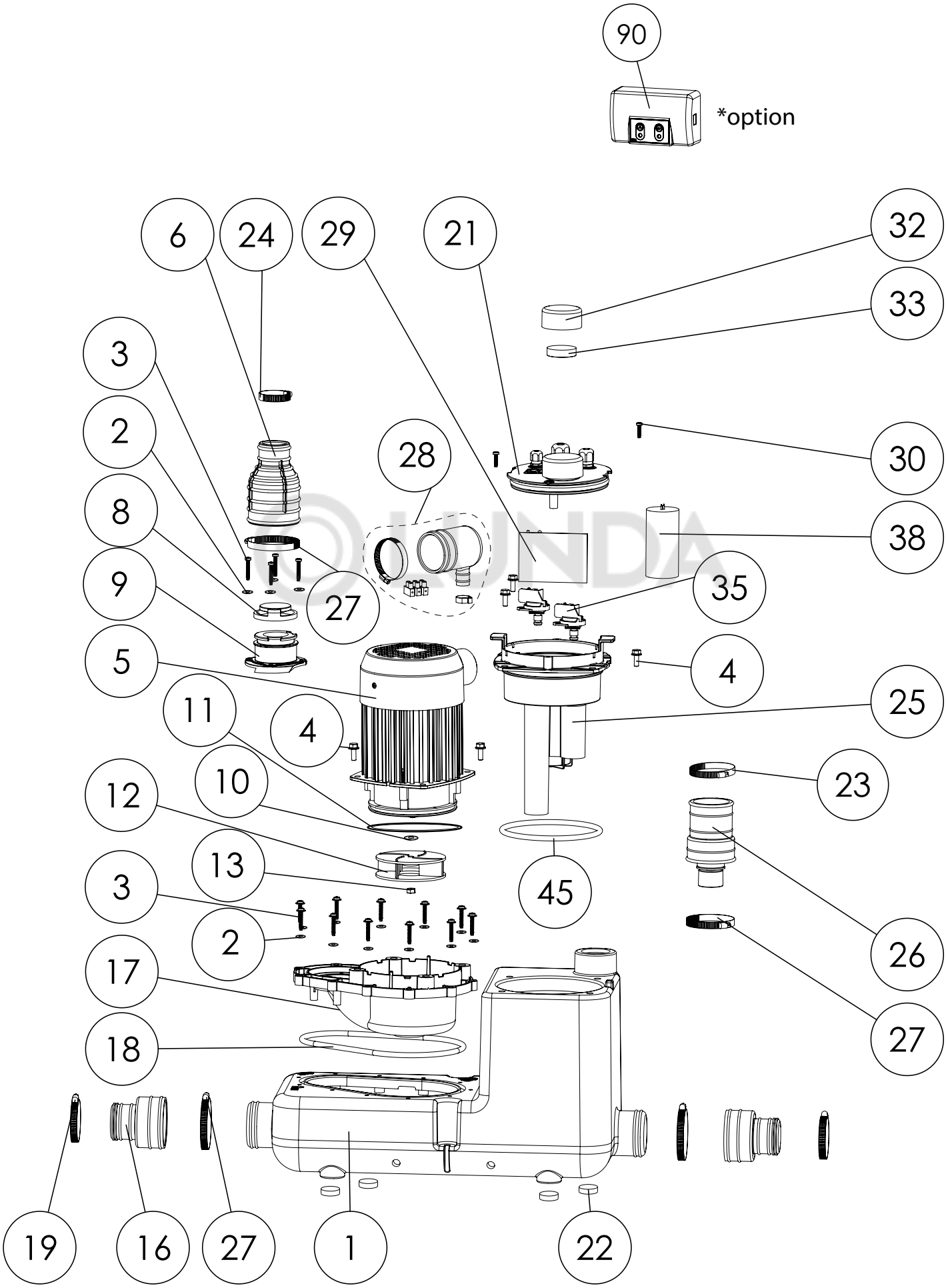
90
*option
6
24
29
21
32
33
3
2
28
30
8
38
9
27
35
5
4
11
4
25
10
23
12
13
45
3
2
26
17
27
18
19
16
27
1
22

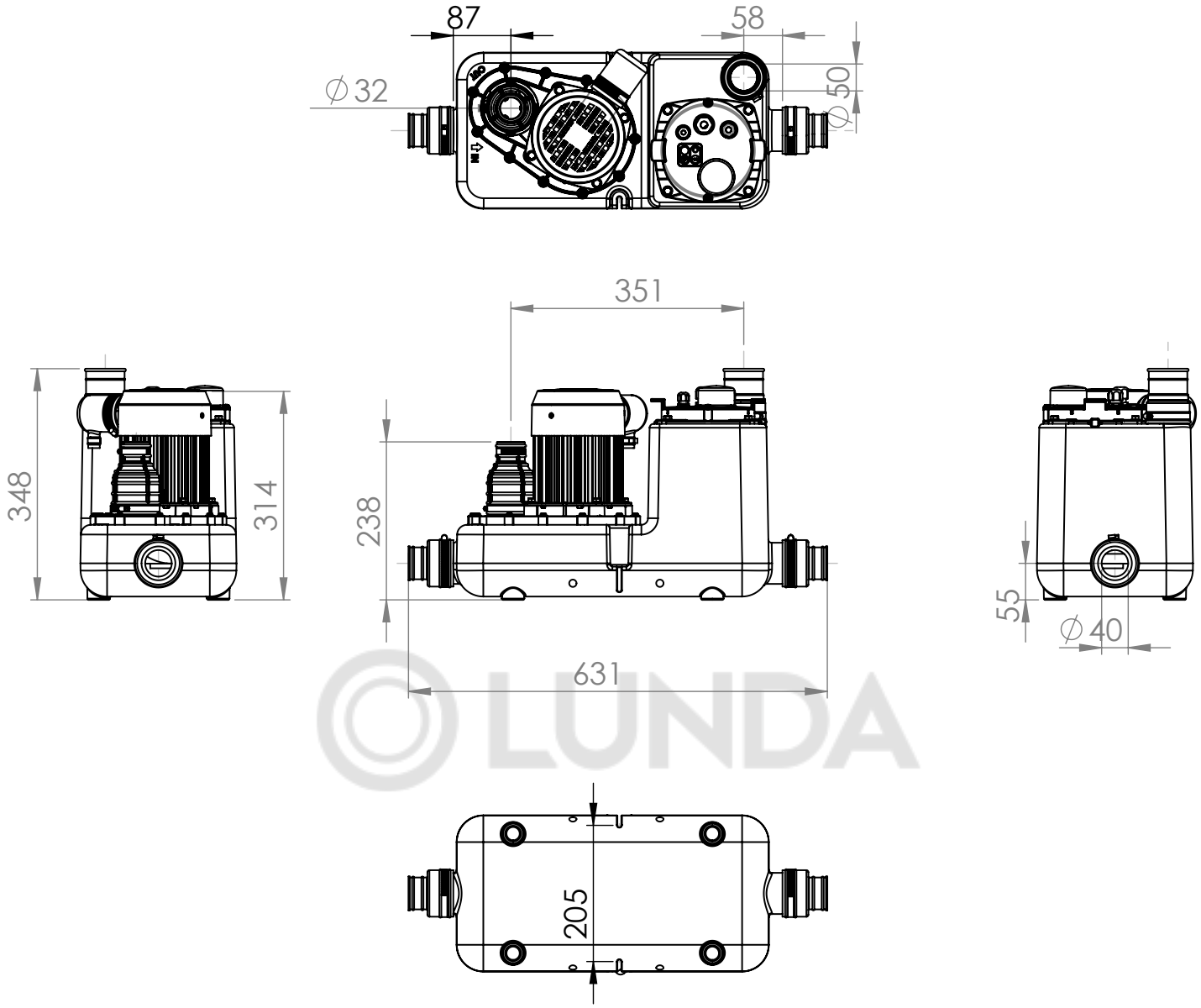

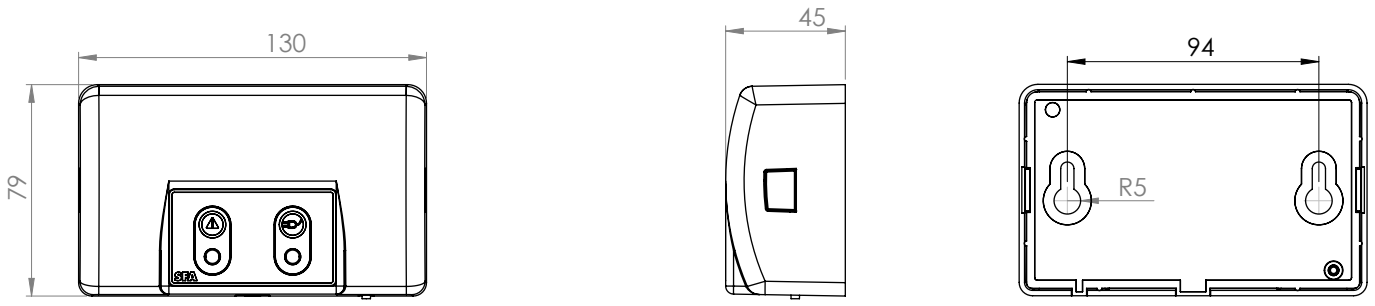

SANICOM1

220-240 V - 50-60 Hz

750W - CLASS 1

10Kg

Max temperature:

90°C for 5Min

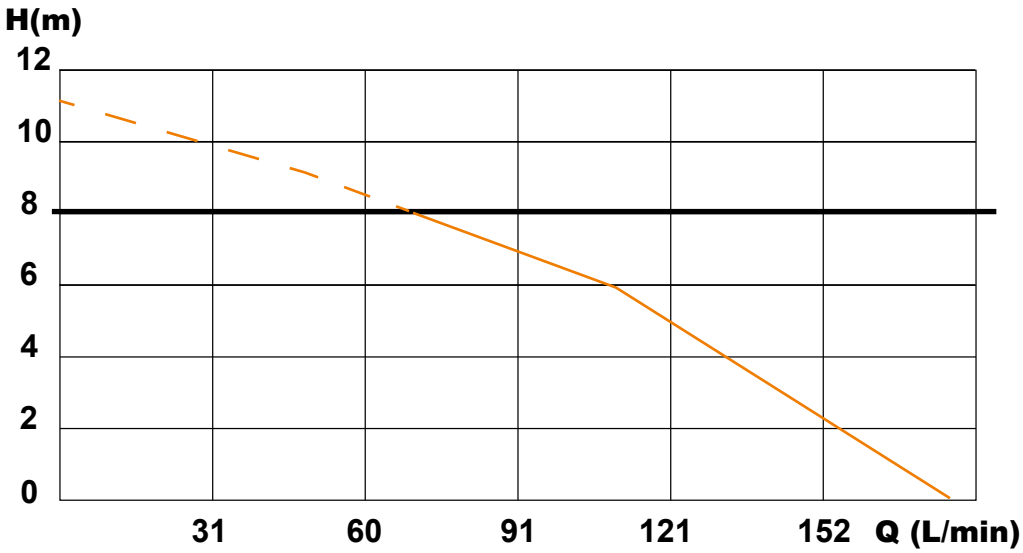

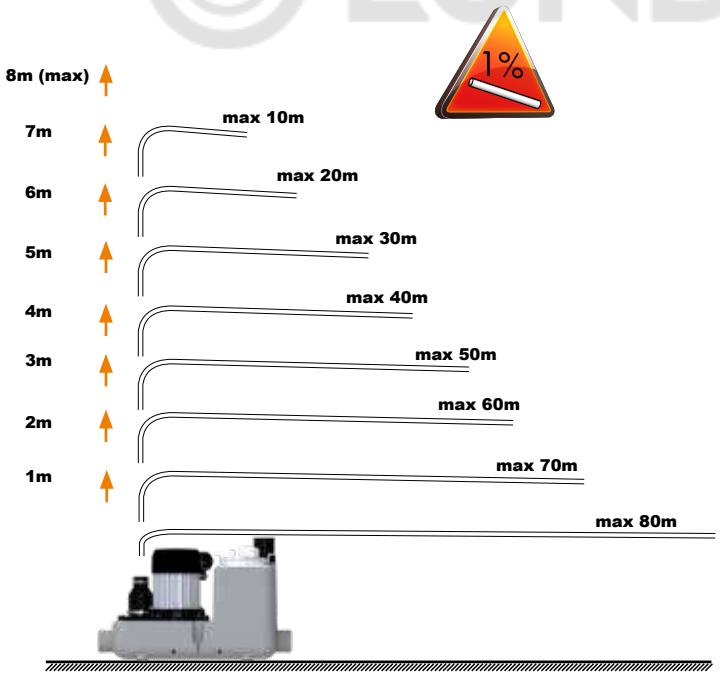

SERVICE HELPLINES

France
Tel. 01 44 82 25 55
Fax. 03 44 94 46 19

United Kingdom
Tel. 08457 650011 (Call from a land line)
Fax. 020 8842 1671

Ireland
Tel. 1850 23 24 25 (LOW CALL)
Fax. + 353 46 97 33 093

Australia
Tel. +1300 554 779
Fax. +61.2.9882.6950

Deutschland
Tel. 0800 82 27 82 0
Fax. (060 74) 30928-90

Italia
Tel. 0382 6181
Fax. +39 0382 618200

España
Tel. +34 93 544 60 76
Fax. +34 93 462 18 96

Portugal
Tel. +35 21 911 27 85
Fax. +35 21 957 70 00

Suisse Schweiz Svizzera
Tel. +41 (0)32 631 04 74
Fax. +41 (0)32 631 04 75

Benelux
Tel. +31 475 487100
Fax. +31 475 486515

Sverige
Tel. +08-404 15 30

Norge
Tel. +08-404 15 30

Polska
Tel. (+4822) 732 00 33
Fax. (+4822) 751 35 16

РОССИЯ
Tel. (495) 258 29 51
Fax. (495) 258 29 51

Česká Republika
Tel. +420 266 712 855
Fax. +420 266 712 856

România
Tel. +40 724 364 543
service@saniflo.ro

Türkiye
Tel. +90 212 275 30 88
Fax. +90 212 275 90 58

Brazil
Tel. (11) 3052-2292

中国
Tel. +86(0)21 6218 8969
Fax. +86(0)21 6218 8970

South Africa
Tel. +27 (0) 21 286 00 28

Service information : www.sfa.biz