其余

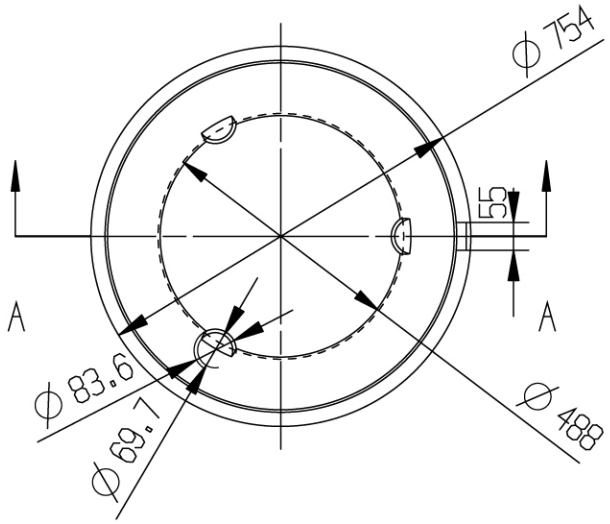


SECTION A-A

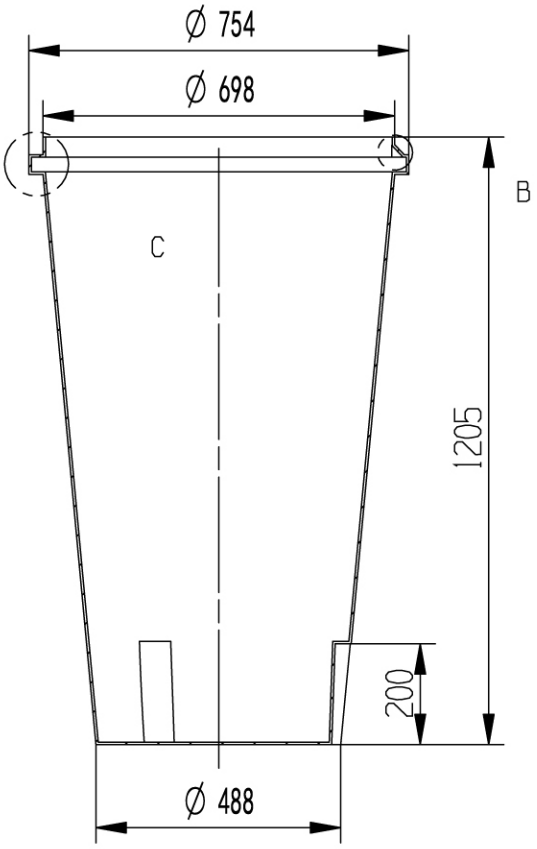


DETAIL B
SCALE 1:5

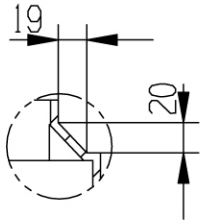


DETAIL C
SCALE 1:5

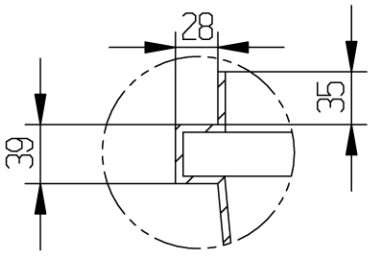


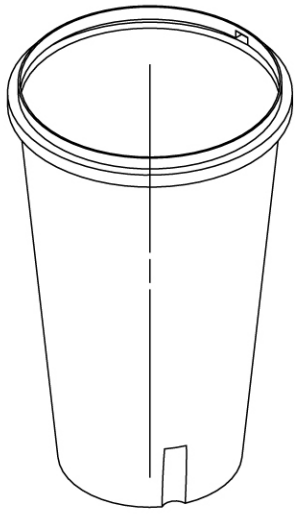

# 350L Brine tank

CANATURE HUAYU