1	**outlet cover**
2	**outlet**
3	**O-ring**
4	**pump external casing**
5	**check valve**
6	**cable jacket**
7	**screw**
8	**cable holder**
9	**guide part**
10	**bracket**
11	**bolt**
12	**upper shaft sleeve**
13	**rubber bearing**
14	**shaft**
15	**gasket**
16	**diffuser**
17	**impeller**
18	**diffuser cover**
19	**bottom shaft sleeve**
20	**plastic shaft sleeve**
21	**shaft coupling**
22	**screw**
23	**strainer**
24	**connector**

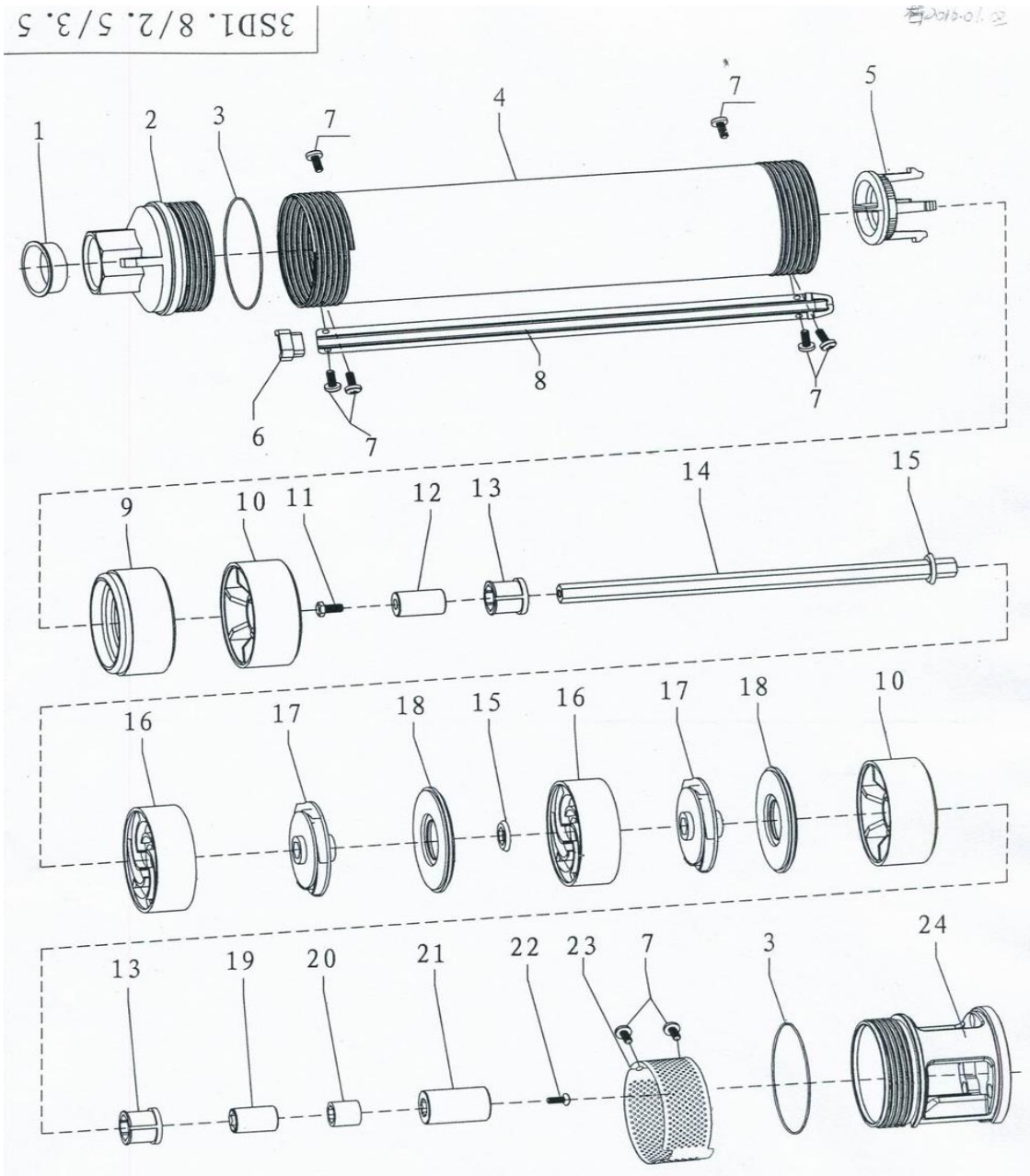

1	rubber sleeve
2	gasket
3	sandproof cover
4	framework oil seal
5	nut
6	spring washer
7	bolt
8	top chock cover
9	oil fill plug
10	O-ring
11	top chock
12	sandproof seal sleeve
13	gasket
14	screw
15	cable
16	screw
17	earth terminal
18	cable clamp
19	cable shield
20	O-ring
21	mechanical seal
22	gasket
23	wave washer
24	bearing
25	snap ring
26	rotor
27	upper bush
28	heat-shrinkable tube
29	wiring terminal
30	winding
31	bottom bush
32	bearing
33	gasket
34	gasket
35	bottom chock
36	motor external casing
37	oil bag
38	bottom base
39	snap ring
40	glass fibre sleeve

