Model	Height	Vol	Weight
3672-4T4B	1850 mm	850L	

A-A
1:10

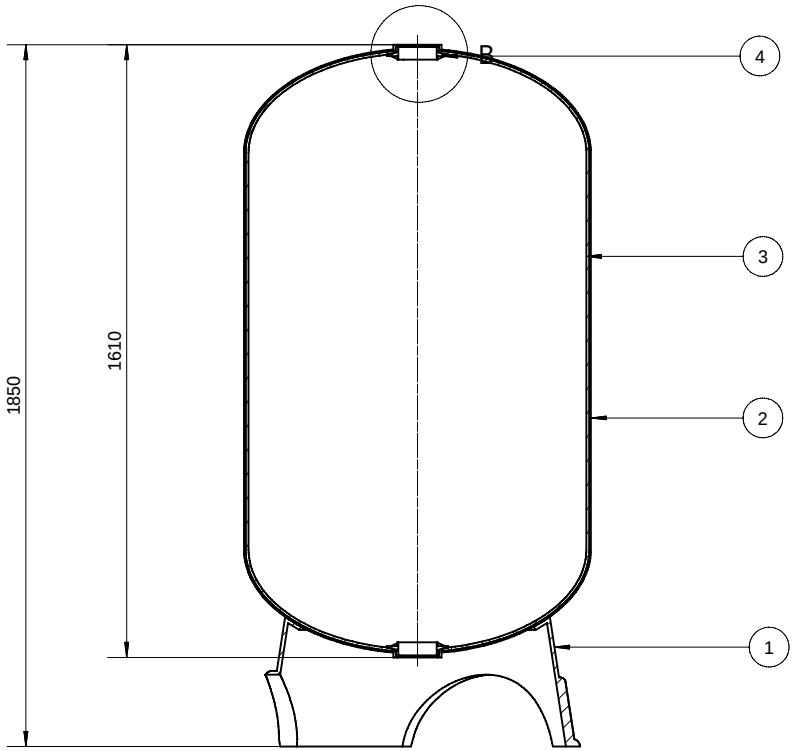

B
1 : 4

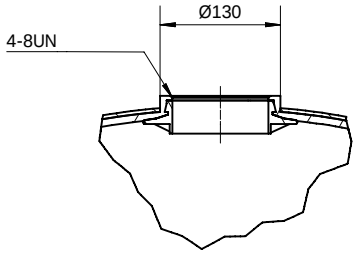

NOTES:
1. Inner shell - Polyethylene (PE) seamless one-piece tank liner
2. Outer shell - Continuous strands of fiber-glass with high strength epoxy resin
3. Bottom base - FRP reinforced tripod base
4. Opening - 4 inch thread opening
5. Tanks meet all applicable specification of NSF/ANSI 044 standard
6. Operating Specifications:
   Maximum Working Pressure : 150 PSI (1.0MPA)
   Temperature :1-49 C (34-120 F)
   Maximum Vacuum:127mm Hg(5”Hg)
7. Liner inspection
   No more than 20 internal 、external blemishes、burnt debris
   No internal 、external blemishes、burnt debris larger than 5 *5 mm
8. Surface finish
9. Surface to be free of resin, glass,nicks,barbed filament
10. Tank to be bonded to base
11. The base to be level correction
12. Top and bottom opening to be parallel,top opening to be parallel with the base

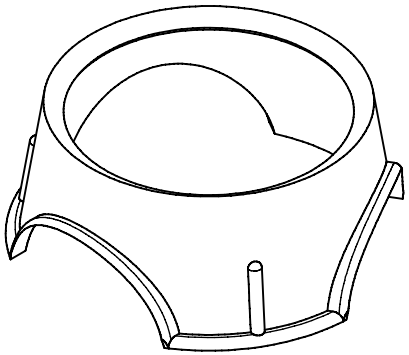

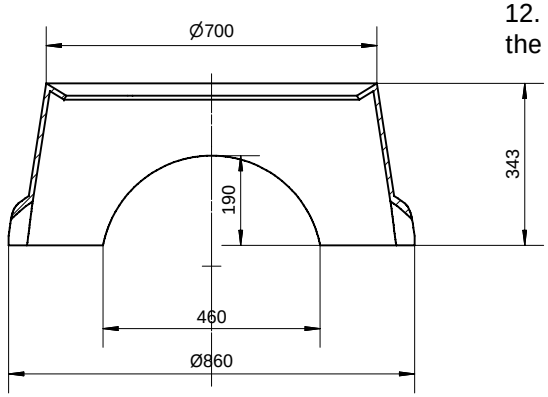

C-C
1 : 8

项目	名称	数量	材料	注释
4	Thread	2	LLDPE	
3	Liner	1	PE	
2	Outer sheel	1	FRP	
1	Base	1	FRP	

明细栏

标记	处数	分区	更改文件号	签名	日期
设计	陈振华	2014/3/8	标准化		
审核					
工艺			批准		

阶段标记	重量(Kg)	比例	
			3672-4T4B

本图尺寸均以mm计，图中尺寸请勿量取。