1	outlet cover
2	outlet
3	screw
4	pump external casing
5	check valve
6	cable sheath
7	cable cover
8	guide part
9	upper bracket
10	bolt
11	upper shaft sleeve
12	rubber bearing
13	shaft
14	gasket
15	pump case
16	impeller
17	pump cover
18	middle bracket
19	lower shaft sleeve
20	plastic shaft sleeve
21	lower bracket
22	rubber bearing
23	shaft coupling
24	screw
25	inlet screen
26	connector

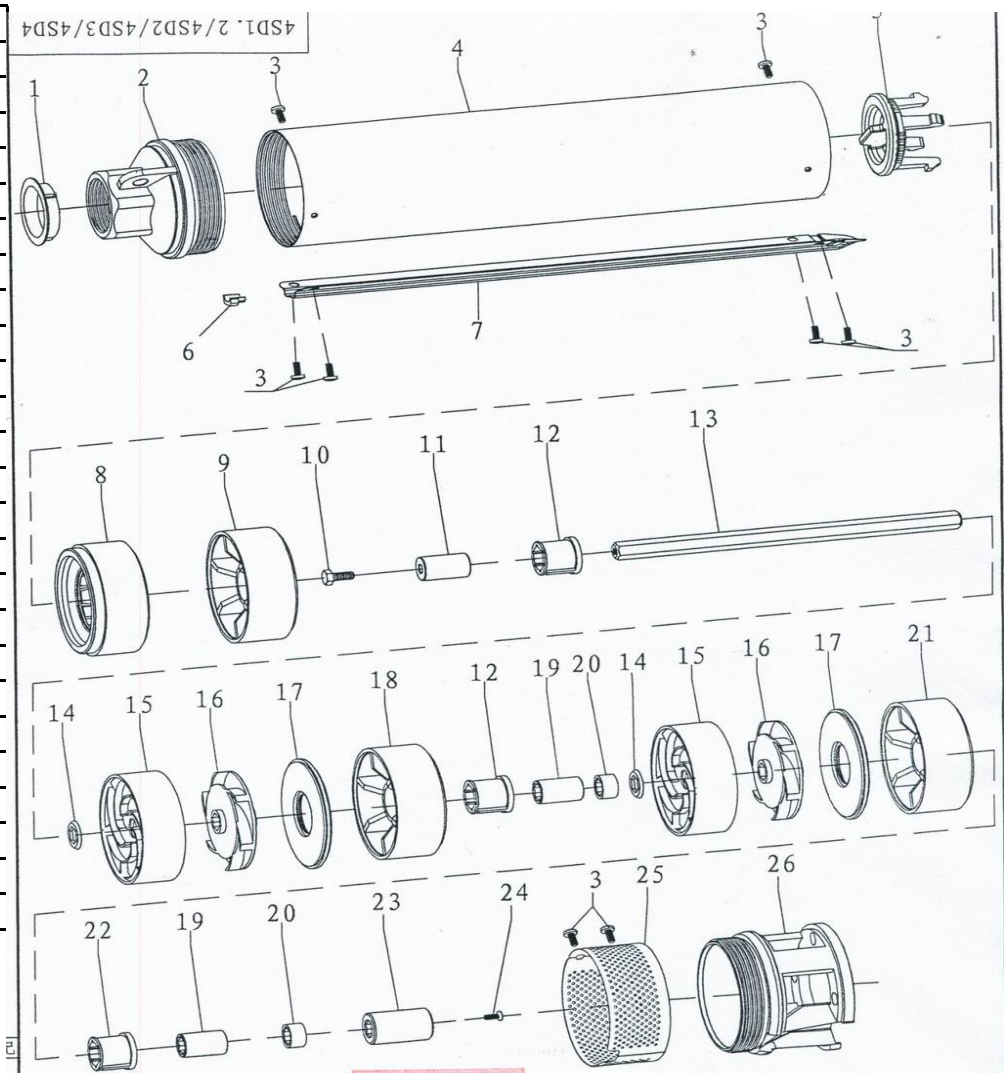

1	outlet cover
2	bolt
3	ring
4	outlet
5	snap ring
6	valve plug
7	skeleton seal
8	outlet locating shell
9	cable cover
10	screw
11	locating cap
12	nut
13	shaft gasket
14	impeller
15	seal ring cover
16	rubber seal ring
17	lower housing of volute seal ring
18	volute
19	rubber bearing
20	pump shaft
21	inlet volute
22	retaining washer
23	shaft washer
24	pump brace
25	shaft coupling
26	reinforcing plate
27	connector

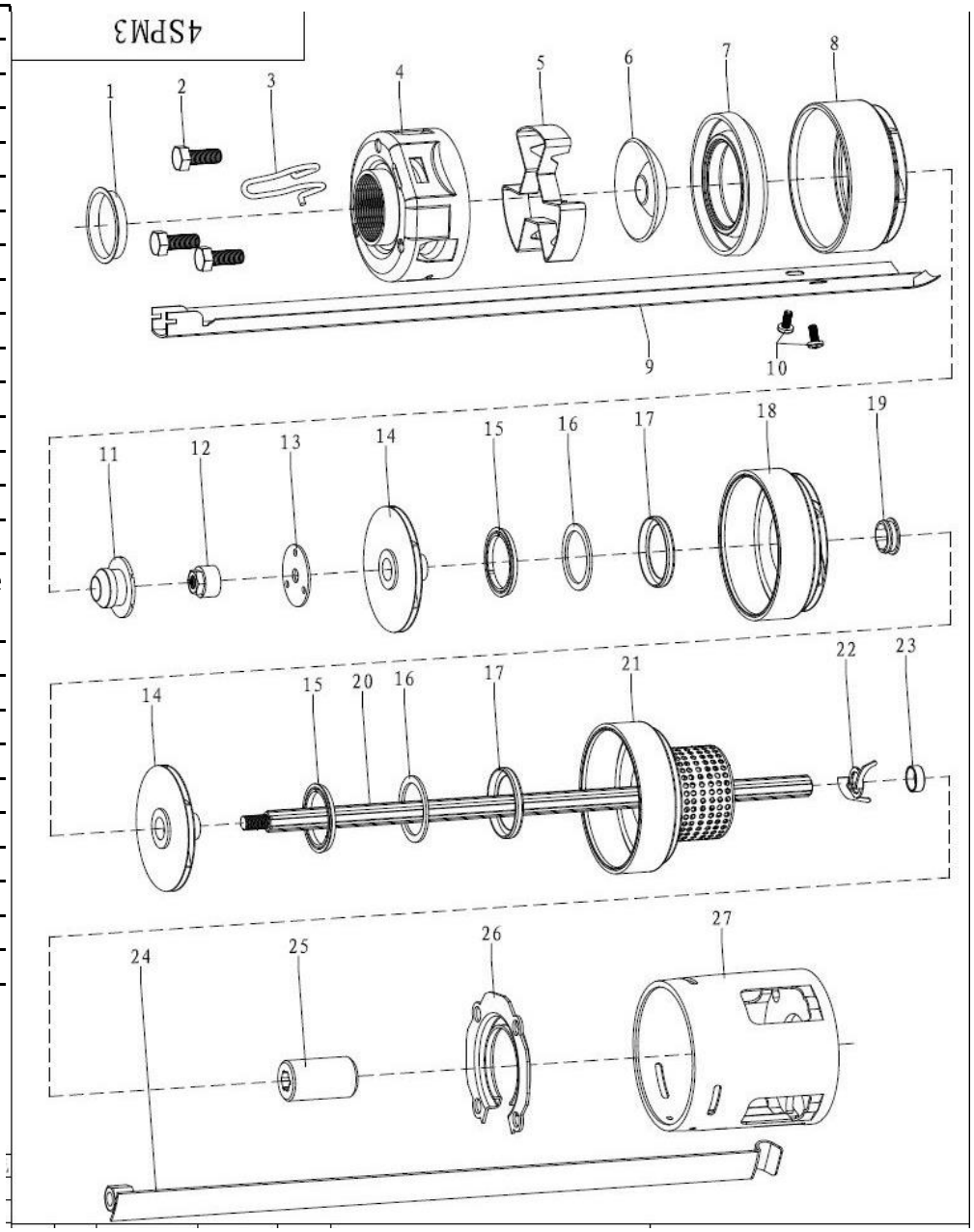

1	rubber sleeve
2	gasket
3	sand jacket
4	nut
5	spring washer
6	bolt
7	top chock cover
8	skeleton oil seal
9	oil fill plug
10	O-ring
11	top chock
12	gasket
13	screw
14	mechanical seal
15	gasket
16	gasket
17	wave washer
18	bearing
19	cable
20	screw
21	cable clamp
22	cable tray
23	cable plug
24	connecting terminal
25	O-ring
26	rotor
27	upper bush
28	winding
29	bottom bush
30	bearing
31	gasket
32	gasket
33	glass fibre sleeve
34	heat-shrinkable tube
35	connecting terminal
36	bottom chock
37	motor external casing
38	oir bag
39	bottom base
40	snap ring

