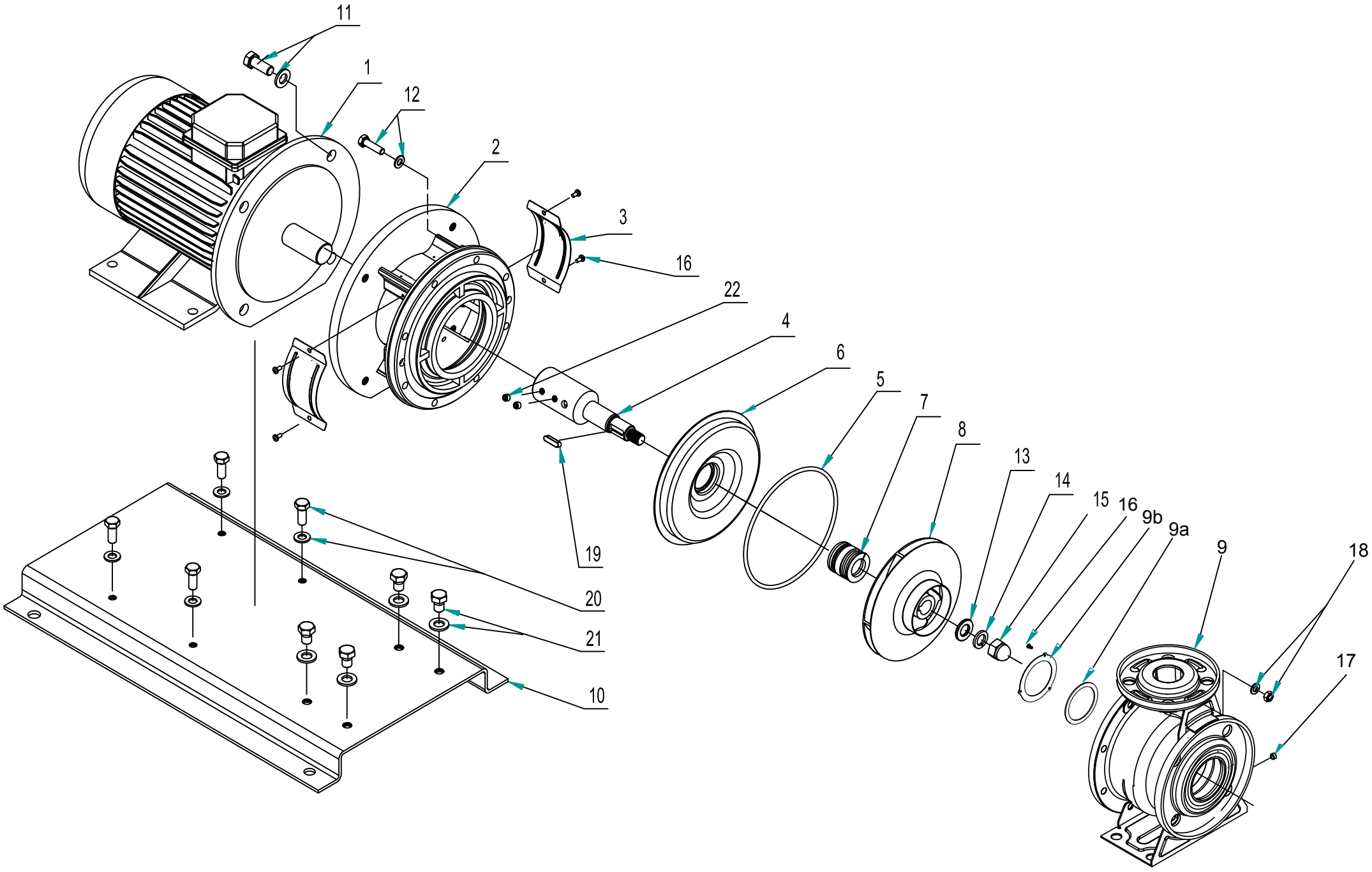
11
1
12
2
3
16
22
4
6
5
7
8
13
14
15
16
9b
9a
9
18
17
19
20
21
10

SERIE CX 40-200/5,5

NR	RICAMBIO	CODICI	
1	MOTOR		
2	PUMP HEAD	8025248	
3	GUARD PLATE	8025207	
4	SHAFT	8025210	
5	O-RING	8025212	
6	LINING	8025252	
7	MECHANICAL SEAL	8025201	
8	IMPELLER	8025256	
9	CASING	8025260	
10	BASE PLATE	8025263	
11	BOLT & WASHER	8025227	
12/18	SET BOLT WASHER PUMP HEAD - CASING	8025230	
13	IMPELLER WASHER	8025231	
14	SPRING WASHER	8025232	
15	IMPELLER NUT	8025233	
16	SCREW FOR GUARD PLATE	8025234	
17	DRAINAGE PLUG	8025235	
19	KEY	8025236	
20	MOTOR BOLT&WASHER	8025238	
21	PUMP BOLT&WASHER	8025240	
22	SHAFT SCREW	8025242	
23	NECK RING	/	